UA-1300AMC OIL-PULSE WRENCH

EXPLODED VIEW

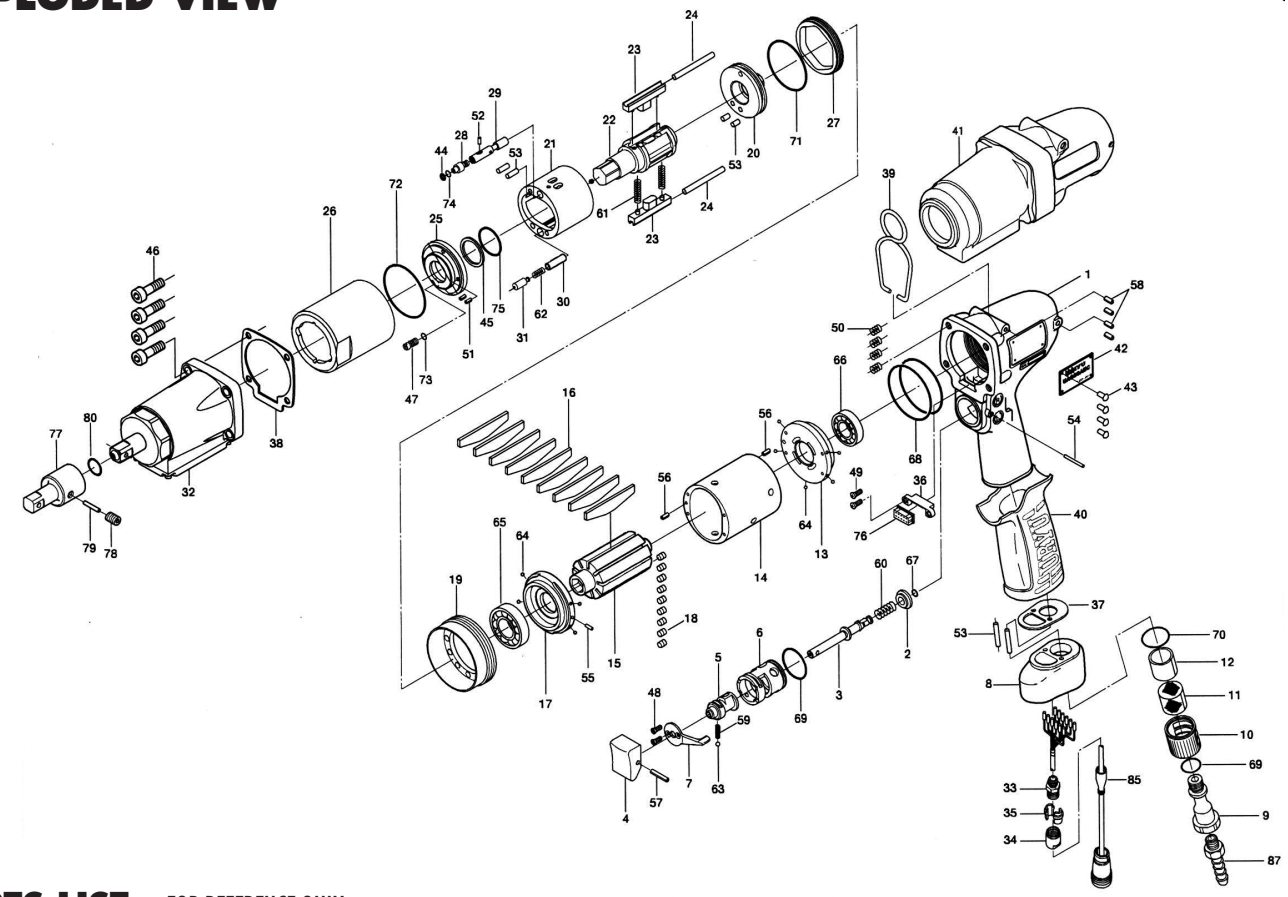

PARTS LIST — FOR REFERENCE ONLY

Index Number	Part Number	Description	Qty.
1	17H-025-0	Handle	1
2	130-100-2	Valve	1
3	130-104-2	Valve Rod	1
4	130-107-2	Valve Lever	1
5	130-210-2	Reverse Valve	1
6	130-211-2	Reverse Valve Bushing	1
7	130-212-2	Reverse Lever	1
8	17H-035-0	Handle Connector	1
9	17H-091-0	Air Inlet Bushing	1
10	130-780-2	Exhaust Stack	1
11	130-042-2	Silencer	1
12	130-835-3	Filter (K50)	1
13	130-285-2	Rear Plate	1
14	123-286-6	Cylinder	1
15	123-287-6	Rotor	1
16	123-288-6	Blade	9
17	123-289-6	Front Plate	1
18	148-064-2	Plug	9
19	17H-036-0	Hammer Casing Connector	1
20	17F-901-7	Rear Liner Plate	1
21	17F-902-7	Liner	1
22	123-319-7	Anvil	1
23	130-440-2	Driving Blade	2
24	130-974-2	Roller (3 x 40)	2
25	17F-904-7	Front Liner Plate	1
26	130-905-2	Liner Casing	1
27	130-906-2	Liner Casing Cover	1
28	175-907-9	Relief Valve Spindle	1
29	17F-970-7	Relief Valve	1
30	17F-274-7	Pressure Valve Spring Collar	1
31	17F-276-7	Pressure Valve Body	1
32	17H-975-0	Sensor Casing Assembly (S15AMC)	1
33	149-079-2	Connector	1
34	149-018-2	Cap	1
35	149-562-2	Stopper	2
36	911-019-0	Connector Cover	1
37	17H-850-0	Handle Packing	1
38	17H-867-0	Front Casing Packing	1
39	174-790-0	Suspension Ring	1
40	17F-842-7	Handle Cover	1
41	17H-840-0	Casing Protector	1
42	17H-924-0	Metal Tag (UA1300AMC)	1
43	930-205-0	Driver Rivet	4
44	944-205-0	Back-up Ring (5.1 x 7 x 1)	1
45	944-215-0	Back-up Ring (16 x 19.9 x 1.5)	1
46	945-420-0	Allen Head Bolt (M6 x 20)	4
47	945-942-0	Hexagon Head Bolt (M4 x 20)	1
48	948-423-0	Allen Head Screw (M3 x 6)	2
49	957-256-0	Cross Head Screw (M2 x 5)	2
50	965-021-0	Heli-sert (M6 x 1 .50)	4
51	969-450-0	Pin G (3 x 8)	2
52	970-092-0	Pin (H)(2 x 5.5)	1
53	970-206-0	Pin (H)(3 x 8)	6
54	971-126-0	Pin (2 x 26)	1
55	973-006-0	Roll Pin (2 x 6)	1
56	973-108-0	Roll Pin (3 x 8)	2
57	973-120-0	Roll Pin (3 x 20)	1
58	973-308-0	Roll Pin (5 x 8)	4
59	976-006-0	Spring (3 x 5)	1
60	976-643-0	Spring (7.5 x 9.7)	1
61	976-801-0	Spring (4.5 x 35.5)	2
62	976-875-0	Spring (4.3 x 26)	1
63	981-002-0	Ball (1/8)	1
64	981-045-0	Ball (1.5 mm)	9
65	982-905-0	Ball Bearing (6904)	1
66	982-950-0	Ball Bearing (16002)	1
67	990-306-0	O -Ring APR568-004(H)	1
68	990-611-0	O-Ring (51.5 x 2)	2
69	990-916-0	O -Ring (SNS-18)	2
70	990-921-0	O -Ring (SNS-22.4)	1
71	990-930-0	O -Ring (SNS-40)	1
72	990-932-0	O -Ring (SNS-42)	1
73	990-971-0	O -Ring (SNS-3)	1
74	990-972-0	O -Ring (SNS-4)	1
75	992-021-0	SU-Ring (Q16)	1
76	910-335-0	Double-Row Socket	1
77	904-190-0	Extension Bar (1/2 x 60)	1
78	953-205-0	Allen Head Screw (M5 x 5)	1
79	971-220-0	Pin (3 x 20)	1
80	990-016-0	O -Ring (P-16)	1

ACCESSORIES

85	910-319-0	Joint Cable Assembly	1
86	939-109-0	Allen Wrench (2)	1
87	940-114-0	Air Hose Nipple (NPT 1/4 x 3/8)	1
88	910-263-0	Sensor Casing Assembly (3F5)	1
89	911-023-0	Encoder Cable Assembly	1
90	909-749-0	Solenoid Valve Assembly	1

FOOTNOTES

AIMCO
10000 SE PINE
PORTLAND, OR 97216
503-254-6600
FAX 503-255-2615

When ordering spare parts, please specify tool type, part number, and description.