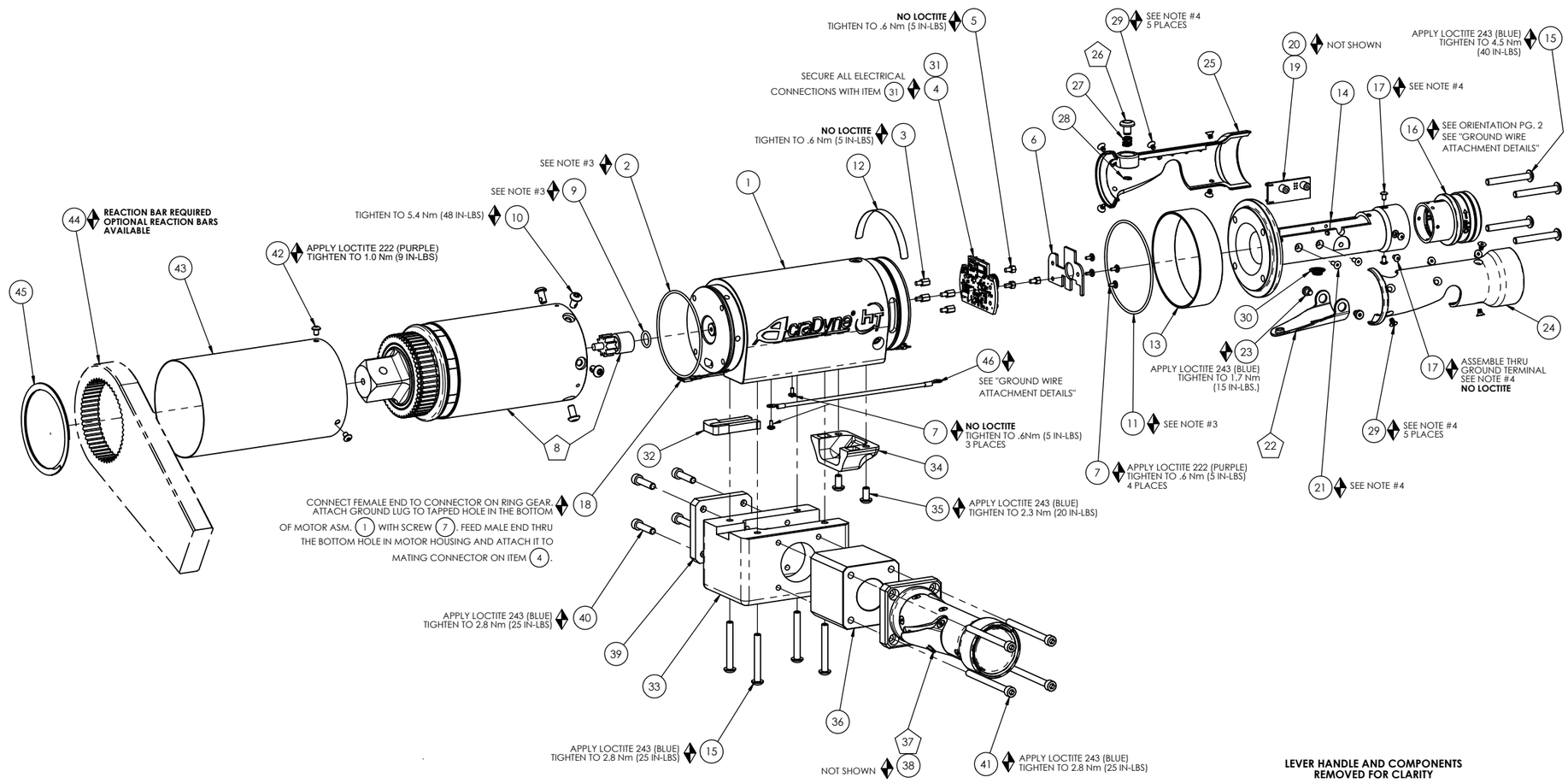

LEVER HANDLE AND COMPONENTS REMOVED FOR CLARITY

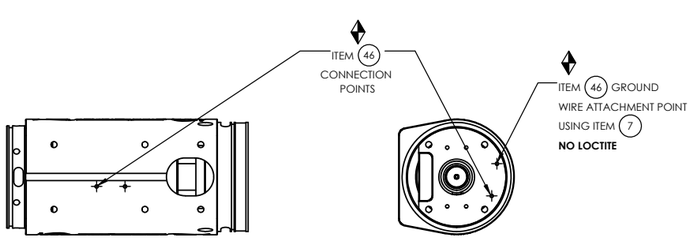

GROUND WIRE ATTACHMENT DETAILS

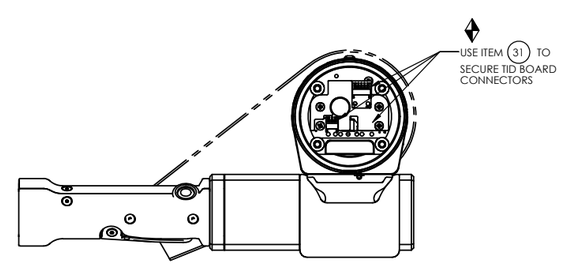

COMMENTS	ITEM NO.	PART NUMBER	QTY.	DESCRIPTION
	1	26212	1	MOTOR ASM., 7000 SERIES
	2	26227	1	O-RING, MOTOR HOUSING
	3	25574	4	STANDOFF M-F,4-40x1/4,3/16 HEX, SS
	4	27727	1	TID BOARD, POPULATED W/AMP
	5	29337	3	STANDOFF, M-F,4-40 X 1/8, SS
	6	29336	1	TID BOARD WIRE INSULATOR
	7	25573	7	SCREW PHP 4-40 X 3/16 18-8 SS
	8	SEE CHART	1	GEARBOX ASM.
	9	26299	1	O-RING, PINION
	10	29279	6	SCREW, BHSC, 10-32 x 3/8, TORX HEAD, NYLON PELL-IT, STEEL
	11	26226	1	O-RING, LED COVER
	12	20534	1	3000 SERIAL/MODEL LABEL
	13	26223	1	LED COVER
	14	26279	1	LEVER HANDLE
	15	26228	8	SCREW, BHSC 10-32X1.50, STEEL, BLACK OXIDE
	16	27660	1	TOOL CONNECTOR ASM., STRAIGHT
	17	25745	5	SCREW, BHSC 4-40 STEEL, BLACK OXIDE
	18	28211	1	(4) LINE MALE/FEMALE JUMPER ASM.
	19	26285	1	LEVER TRIGGER PCB ASM.
NOT SHOWN	20	26526	1	TRIGGER CABLE
	21	24934	2	SCREW, FHC 4-40 X .312, STEEL, BLACK OXIDE
	22	26532	1	GEN 3 TRIGGER ASSY, CAST
	23	20061	2	SCREW, LEVER
	24	26083	1	HANDLE COVER
	25	26084	1	HANDLE COVER, MFB
	26	24706	1	REV BUTTON SUB-ASSEMBLY
	27	24683	1	SPRING, REV BUTTON
	28	24679	1	RETAINING RNG
	29	24938	10	SCREW, FHSC 4-40X.188, STEEL, BLACK OXIDE
	30	20132	1	THROTTLE SPRING
NOT SHOWN	31	27464	A/R	TWISTED WAXED LINEN TWINE
	32	24838	1	TRANSDUCER CABLE CHASE
	33	28060	1	HANDLE BLOCK, HT DUAL LEVER
	34	26224	1	TRAY, WIRE, PISTOL, INJECTION MOLDED
	35	26206	2	SCREW, BHSC 10-32 X .375, STEEL
	36	28059	1	HANDLE SPACER, HT DUAL LEVER
	37	28070	1	HANDLE ASM., DUAL LEVER, MFB DISABLED
NOT SHOWN	38	28107	1	TRIGGER CABLE ASM.
	39	28061	1	COVER, HT DUAL LEVER
	40	26789	4	SCREW, SHC, 10-32 x 7/8, STEEL, BLACK OXIDE
	41	28002	4	SCREW, SHC, 10-32 X 2.5, STEEL
	42	26319	3	SCREW, BHSC 6-32 X .188, 18-8 SS
	43	SEE CHART	1	GEAR CASE COVER
	44	26897	1	CHOOSE REACTION BAR
	45	26243	1	RETAINING RING, SPIRAL, Ø2.864 X Ø2.464 X .078
	46	31410	1	GROUND WIRE ASSEMBLY, 18 AWG, 6000 & 7000 HT SERIES

TOOL MODEL	GEAR BOX ASM.	GEAR CASE COVER
AES4A771000BDLL	28110	26298
AES4A771000BDLR	28110	26298
AES4A772500BDLL	28111	26295
AES4A772500BDLR	28111	26295

ASSEMBLY INSTRUCTIONS

SUB-ASSEMBLY

1) GEARS & SPLINES: LUBRICATE WITH DOW CORNING MOLYKOTE BR2 PLUS GREASE.

2) BEARINGS: LUBRICATE WITH CHEVRON SR1 GREASE

3) O-RINGS: LUBRICATE WITH O-RING LUBE

4) APPLY LOCTITE 222 (PURPLE), TIGHTEN TO 1.0Nm (9 IN-LBS.)

AIMCO
AcraDyne
A Division of AIMCO
10000 SE PINE STREET
PORTLAND, OREGON 97216
503.254.6600

DOCUMENT CONTROL
PRINTED COPIES OF THIS DOCUMENT ARE CONSIDERED TO BE UNCONTROLLED DOCUMENTS. HOLDERS ARE RESPONSIBLE FOR VERIFYING THE CURRENT REVISION LEVEL WITH PURCHASING OR ENGINEERING PRIOR TO USE OR FABRICATION. THE CONTROLLED VERSION OF THIS DOCUMENT IS ELECTRONICALLY MAINTAINED.

PROPRIETARY AND CONFIDENTIAL
THIS DRAWING CONTAINS INFORMATION STRICTLY CONFIDENTIAL TO ACRADYNE/AIMCO. IN THE ABSENCE OF EXPRESSED WRITTEN PERMISSION, ACRADYNE/AIMCO HAS LOANED THIS COPY WITH THE MUTUAL UNDERSTANDING THAT (A) IT WILL NOT BE USED FOR ANY PURPOSE OTHER THAN FOR THAT IN WHICH IT WAS PROVIDED, (B) THE DATA CONTAINED HEREIN WILL NOT BE DISCLOSED TO OTHERS, (C) IT WILL NOT BE REPRODUCED, AND (D) IT WILL BE RETURNED TO ACRADYNE/AIMCO IMMEDIATELY UPON DEMAND.

REVISION BLOCK

UNLESS OTHERWISE SPECIFIED, DIMENSIONS ARE IN INCHES
DIMENSIONS AND TOLERANCING PER ANSI Y14.5
SURFACE ROUGHNESS PER ANSI Y14.36

BLOCK TOLERANCING PER DECIMAL:
.X = ±.030 .XX = ±.010 .XXX = ±.005 .XXXX = ±.0005
ANGLE = ±0° 30'

REMOVE BURRS AND SHARP EDGES: R.015 MAX
MACHINE SURFACE FINISH: 125 RMS OR BETTER

DRAWINGS AND TECHNICAL DOCUMENTS CONTROLLED BY:
ACRADYNE MECHANICAL ENGINEERING

INLINE NUTRUNNER
DUAL LEVER
7000 SERIES

SIZE	PART / DRAWING NUMBER	REVISION
D	AES4A77_ _00BDL_	A

SCALE 1:2 | DO NOT SCALE DRAWING | SHEET 1 OF 2

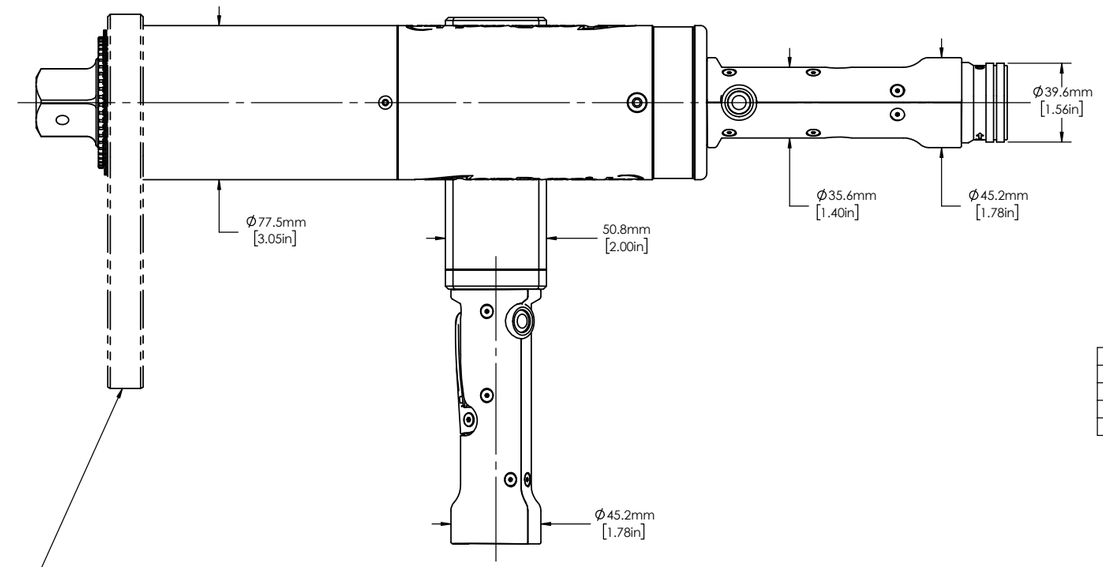

TOOL MODEL #
AES4A771000BDLL
AES4A771000BDLR
AES4A772500BDLL
AES4A772500BDLR

NOTE:
RIGHT HAND TOOLS NOT SHOWN IN OUTLINE

NOTE:
REACTION BAR GEOMETRY TO CHANGE DEPENDING ON REACTION BAR CHOSEN.

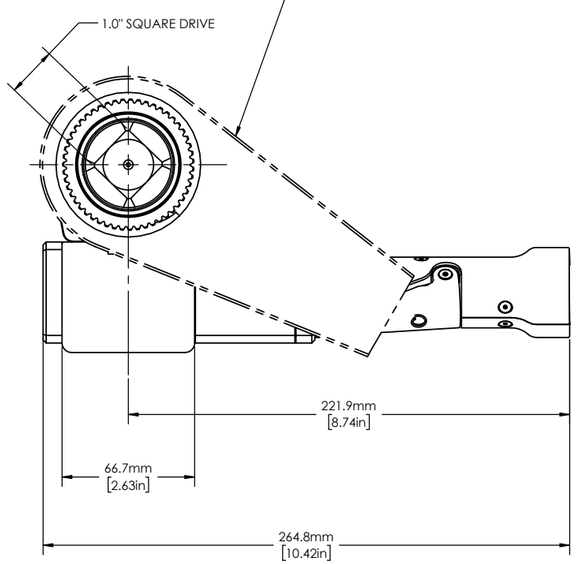

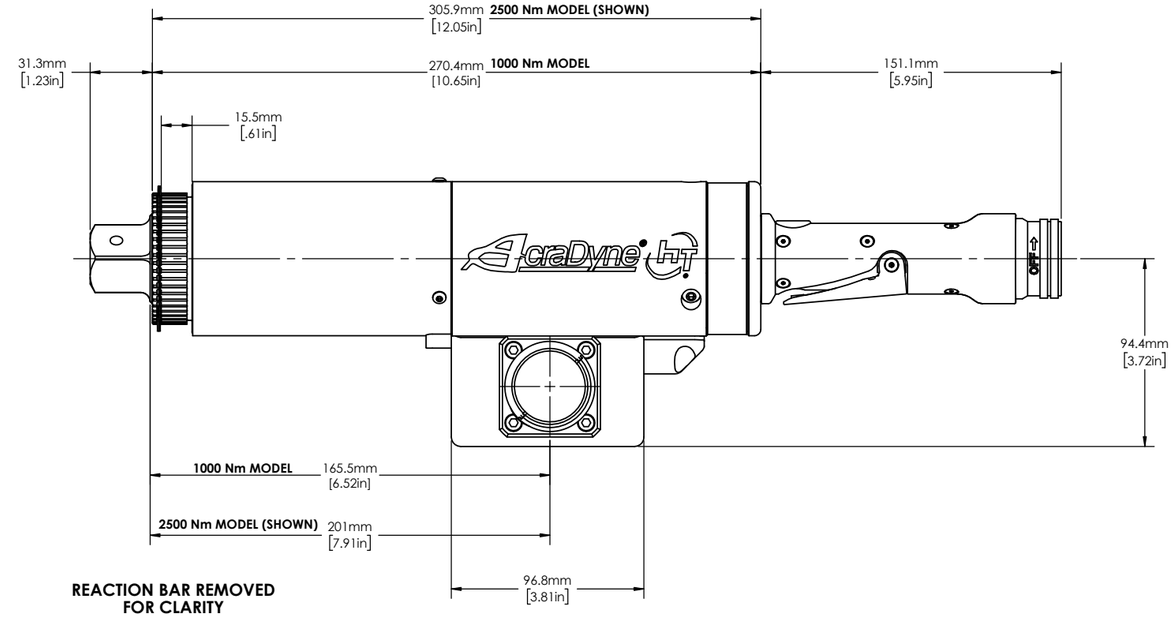

REACTION BAR REMOVED FOR CLARITY

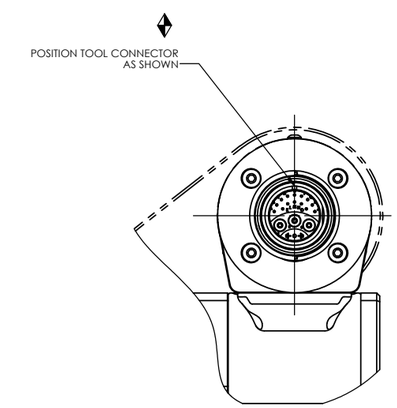

AIMCO
AcraDyne
A Division of AIMCO
10000 SE PINE STREET
PORTLAND, OREGON 97216
503.254.6600

DOCUMENT CONTROL

PRINTED COPIES OF THIS DOCUMENT ARE CONSIDERED TO BE UNCONTROLLED DOCUMENTS. HOLDERS ARE RESPONSIBLE FOR VERIFYING THE CURRENT REVISION LEVEL WITH PURCHASING OR ENGINEERING PRIOR TO USE OR FABRICATION. THE CONTROLLED VERSION OF THIS DOCUMENT IS ELECTRONICALLY MAINTAINED.

PROPRIETARY AND CONFIDENTIAL

THIS DRAWING CONTAINS INFORMATION STRICTLY CONFIDENTIAL TO ACRADYNE/AIMCO. IN THE ABSENCE OF EXPRESSED WRITTEN PERMISSION, ACRADYNE/AIMCO HAS LOANED THIS COPY WITH THE MUTUAL UNDERSTANDING THAT (A) IT WILL NOT BE USED FOR ANY PURPOSE OTHER THAN FOR THAT IN WHICH IT WAS PROVIDED, (B) THE DATA CONTAINED HEREIN WILL NOT BE DISCLOSED TO OTHERS, (C) IT WILL NOT BE REPRODUCED, AND (D) IT WILL BE RETURNED TO ACRADYNE/AIMCO IMMEDIATELY UPON DEMAND.

REVISION BLOCK

UNLESS OTHERWISE SPECIFIED, DIMENSIONS ARE IN INCHES
DIMENSIONS AND TOLERANCING PER ANSI Y14.5
SURFACE ROUGHNESS PER ANSI Y14.36

BLOCK TOLERANCING PER DECIMAL:
.X = ±.030 .XX = ±.010 .XXX = ±.005 .XXXX = ±.0005
ANGLE = ±0° 30'

REMOVE BURRS AND SHARP EDGES: R.015 MAX
MACHINE SURFACE FINISH: 125 RMS OR BETTER

DRAWINGS AND TECHNICAL DOCUMENTS CONTROLLED BY:
ACRADYNE MECHANICAL ENGINEERING

INLINE NUTRUNNER
DUAL LEVER
7000 SERIES

SIZE	PART / DRAWING NUMBER	REVISION
D	AES4A77_ _00BDL_	A

SCALE 1:1 | DO NOT SCALE DRAWING | SHEET 2 OF 2